Dart Aerospace Ltd.

Date: Monday, 2/19/2007 3:26:59 PM
User: Kim Johnston

Process Sheet

Customer	: CU-DAR001 Dart Helicopters Services	Drawing Name	: TAIL LIGHT FAIRING
Job Number	: 30770		
Estimate Number	: 12359		
P.O. Number	: N/A	Part Number	: D34841
This Issue	: 2/19/2007 S.O. No. : N/A	Drawing Number	: D3484 REV D
Prsht Rev.	: NC	Project Number	: N/A
First Issue	: N/A Type : SMALL /MED FAB	Drawing Revision	: D
Previous Run	: 27221	Material	: N/A
Written By	:	Due Date	: 3/10/2007 Qty: 5 Um: Each
Checked & Approved By	: 07.02.19		
Comment	: Est Rev:A New Issue 06-04-11 JLM		

Additional Product

Job Number:

Seq. #:	Machine Or Operation:	Description :
1.0	M6061T6S050	6061-T6 .050 Sheet

Comment: Qty.: 0.3505 sf(s)/Unit Total : 1.7525 sf(s)
6061-T6 .050 Sheet
(M6061T6S050)
Batch: M17347 SAD 07/02/24 5

2.0	WATER JET	FLOW WATER JET

Comment: FLOW WATER JET
Cut as per Dwg D3484 SAD 07/02/24 5

3.0	QC2	INSPECT PARTS AS THEY COME OFF MACHINE

Comment: INSPECT PARTS AS THEY COME OFF MACHINE SAD 07/02/24 5

4.0	QC8	SECOND CHECK

Comment: SECOND CHECK BG 07.02.24 5

5.0	SMALL FAB 1	SMALL & MEDIUM FAB RESOURCE 1

Comment: SMALL & MEDIUM FAB RESOURCE 1 x4

1-Deburr SAD 07/02/28 5

2-Roll as per Dwg D3484 ml 07/03/05 PTO

Form: rprocess

Dart Aerospace Ltd

W/O:		WORK ORDER CHANGES					
DATE	STEP	PROCEDURE CHANGE	By	Date	Qty	Approval Chief Eng / Prod Mgr	Approval QC Inspector

Part No: _____ **PAR #:** _____ **Fault Category:** _____ **NCR:** Yes (No) **DQA:** [illegible] **Date:** 08/04/11

QA: N/C Closed: _____ **Date:** _____

NCR:		WORK ORDER NON-CONFORMANCE (NCR)						
DATE	STEP	Description of NC Section A	Corrective Action Section B			Verification Section C	Approval Chief Eng	Approval QC Inspector
			Initial Chief Eng	Action Description Chief Eng	Sign & Date			
07/03/05	5	Scrap one part D 3484-1 - bend on wrong side try to rebend but scrap	[illegible] 05/04/2	Destroy and no replace ~~Take 10 m~~	[illegible] 07/03/05	[illegible] 07/03/20	[illegible] 05/04/2	[illegible] 07/03/20

NOTE: Date & initial all entries

H:\fFORMS\Quality Assurance\approved QA\NCRWO RevD

Date: Monday, 2/19/2007 3:26:59 PM
User: Kim Johnston

Process Sheet

Customer: CU-DAR001 Dart Helicopters Services **Drawing Name:** TAIL LIGHT FAIRING

Job Number: 30770 **Part Number:** D34841

Job Number:

Seq. #:	Machine Or Operation:	Description :
6.0	QC5	INSPECT WORK TO CURRENT STEP
	Comment: INSPECT WORK TO CURRENT STEP	07/03/20 (4)
7.0	PACKAGING 1	PACKAGING RESOURCE #1
	Comment: PACKAGING RESOURCE #1 Identify and Stock Location:_____	07/04/10 (4)
8.0	QC21	FINAL INSPECTION/W/O RELEASE (4)
	Comment: FINAL INSPECTION/W/O RELEASE	07/04/1.

Job Completion

4 07.04.11

Form: mprocess

Dart Aerospace Ltd

W/O:		WORK ORDER CHANGES					
DATE	STEP	PROCEDURE CHANGE	By	Date	Qty	Approval Chief Eng / Prod Mgr	Approval QC Inspector

Part No: _____ **PAR #:** _____ **Fault Category:** _____ **NCR:** Yes No **DQA:** _____ **Date:** _____

QA: N/C Closed: _____ **Date:** _____

NCR:		WORK ORDER NON-CONFORMANCE (NCR)						
DATE	STEP	Description of NC Section A	Corrective Action Section B			Verification Section C	Approval Chief Eng	Approval QC Inspector
			Initial Chief Eng	Action Description Chief Eng	Sign & Date			

NOTE: Date & initial all entries

DESIGN	DRAWN BY	DART AEROSPACE LTD HAWKESBURY, ONTARIO, CANADA
CHECKED	APPROVED	DRAWING NO. D3484 — REV. D — SHEET 1 OF 4
DATE 06.06.22		TITLE TAIL LIGHT FAIRING — SCALE 1:4

A	05.11.29	NEW ISSUE
B	06.02.21	RE-DESIGN
C	06.04.20	RE-DESIGN OF D3484-3F/-5F
D	06.06.22	CORRECTED D3484-1F FLAT PATTERN

RELEASED
06.08.17

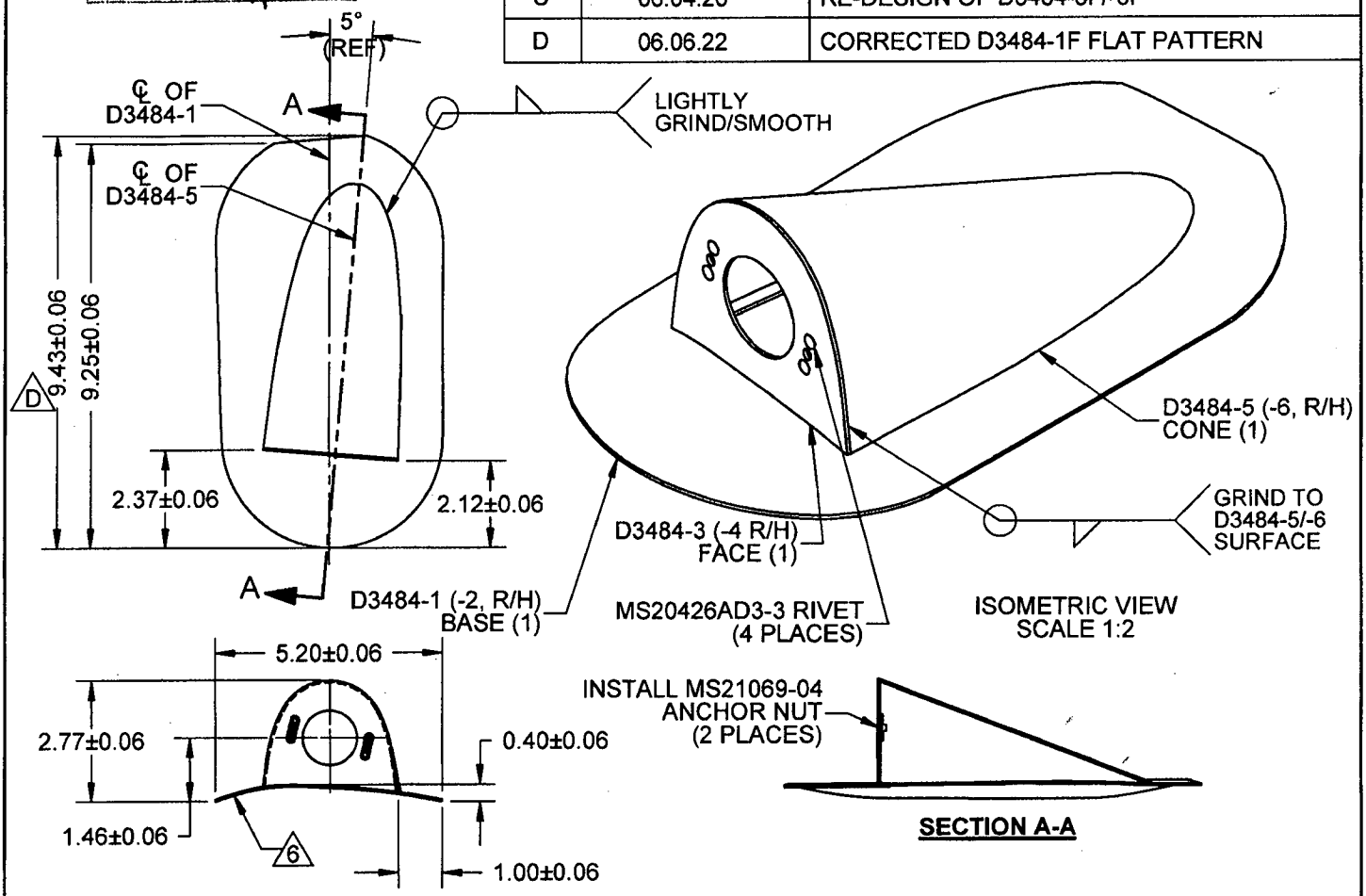

D3484-041 TAIL LIGHT FAIRING, L/H (SHOWN), R/H (OPPOSITE)

NOTES:

1) WELD PER DART QSI 004
2) FINISH: ACID ETCH AND ALODINE PER DART QSI 005 4.1
3) TOLERANCES ARE PER DART QSI 018 UNLESS OTHERWISE NOTED
4) ALL DIMENSIONS ARE IN INCHES
5) BREAK ALL SHARP EDGES 0.010 TO 0.020
6) IDENTIFY ON INSIDE SURFACE AS INDICATED WITH WHITE LABEL: "TCCA-PDA, DART AEROSPACE LTD., P/N D412-750-141/-142 B/N BXXXXX, FOR PRODUCT ELIGIBILITY SEE PDA06-13"

QTY -041	QTY -042	P/N	DESCRIPTION
X		**D3484-041**	**TAIL LIGHT FAIRING ASSEMBLY (L/H)**
	X	**D3484-042**	**TAIL LIGHT FAIRING ASSEMBLY (R/H)**
1		D3484-1	BASE (L/H)
	1	D3484-2	BASE (R/H)
1		D3484-3	FACE (L/H)
	1	D3484-4	FACE (R/H)
1		D3484-5	CONE (L/H)
	1	D3484-6	CONE (R/H)
4	4	MS20426AD3-3	RIVET
2	2	MS21069-04	ANCHOR NUT

SHOP COPY
RETURN TO ENGINEERING
UNCONTROLLED COPY
SUBJECT TO AMENDMENT WITHOUT NOTICE
WORK ORDER NO. 30770

COPYRIGHT © 2005 BY DART AEROSPACE LTD.

THIS DOCUMENT IS PRIVATE AND CONFIDENTIAL AND IS SUPPLIED ON THE EXPRESS CONDITION THAT IT IS NOT TO BE USED FOR ANY PURPOSE OR COPIED OR COMMUNICATED TO ANY OTHER PERSON WITHOUT WRITTEN PERMISSION FROM DART AEROSPACE LTD.

DESIGN	DRAWN BY	DART AEROSPACE LTD HAWKESBURY, ONTARIO, CANADA	
CHECKED	APPROVED	DRAWING NO. D3484	REV. D SHEET 2 OF 4
DATE 06.06.22		TITLE TAIL LIGHT FAIRING	SCALE 1:2

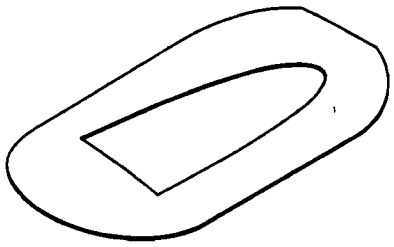

D3484-1 BASE, L/H

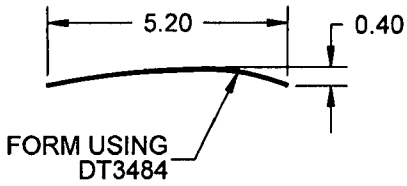

D3484-1 BENDING DETAIL
(D3484-2 OPPOSITE)
(MAKE FROM D3484-1F)

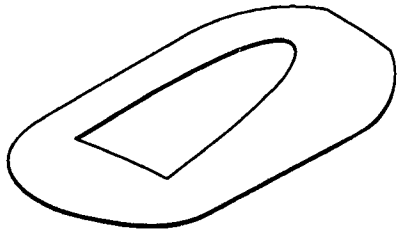

D3484-2 BASE, R/H

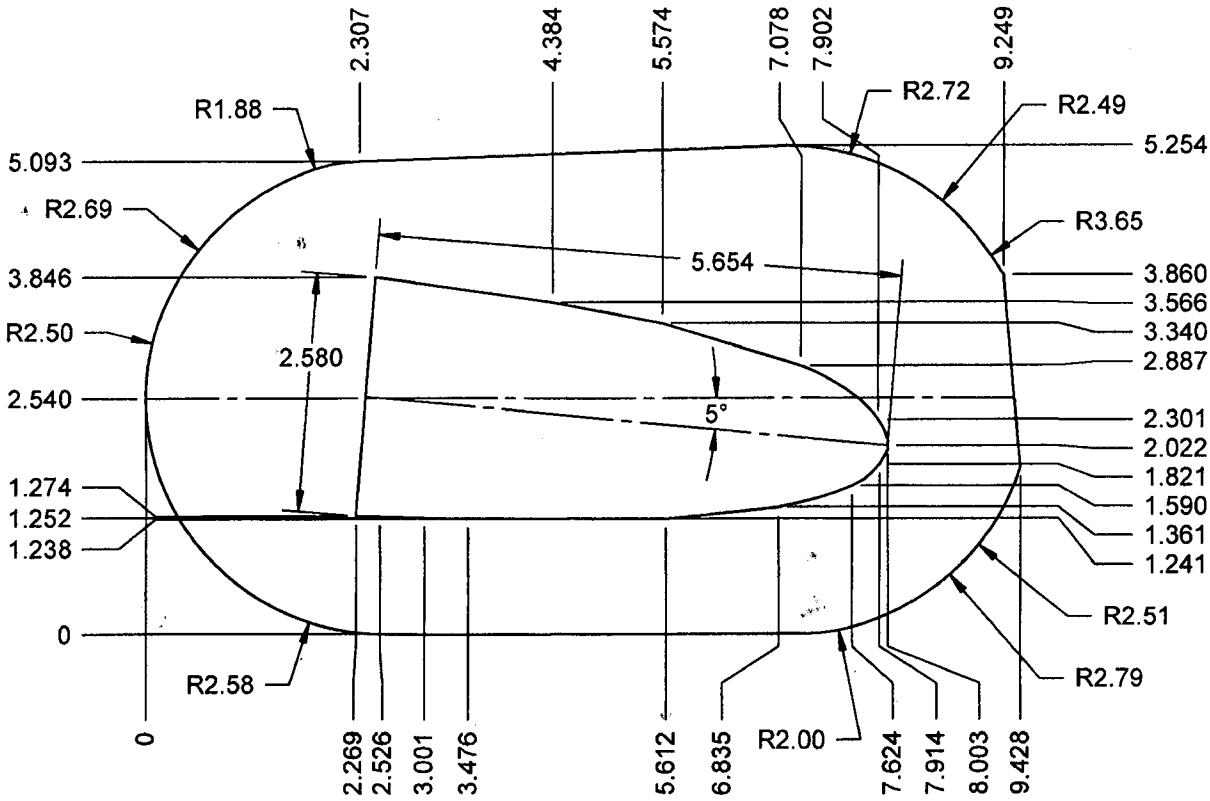

D3484-1F BASE FLAT PATTERN (D)

RELEASED
06.08.17
SHOP COPY
RETURN TO
ENGINEERING
UNCONTROLLED COPY
SUBJECT TO AMENDMENT
WITHOUT NOTICE
WORK ORDER
NO. 30770

NOTES:

1) MATERIAL: 6061-T6 (OR 6061-T62) ALUMINUM SHEET (0.050 THICK)
PER AMS-QQ-A-250/11 OR AMS 4025 OR AMS 4027
(REF. DART SPEC. M6061T6S.050)
2) FINISH: NONE
3) TOLERANCES ARE PER DART QSI 018 UNLESS OTHERWISE NOTED
4) ALL DIMENSIONS ARE IN INCHES
5) BREAK ALL SHARP EDGES 0.005 TO 0.010

COPYRIGHT © 2005 BY DART AEROSPACE LTD.
THIS DOCUMENT IS PRIVATE AND CONFIDENTIAL AND IS SUPPLIED ON THE EXPRESS CONDITION THAT IT IS NOT TO BE USED FOR ANY PURPOSE OR COPIED OR COMMUNICATED TO ANY OTHER PERSON WITHOUT WRITTEN PERMISSION FROM DART AEROSPACE LTD.

DESIGN	DRAWN BY	DART AEROSPACE LTD HAWKESBURY, ONTARIO, CANADA	
CHECKED	APPROVED	DRAWING NO. D3484	REV. D SHEET 3 OF 4
DATE 06.06.22		TITLE TAIL LIGHT FAIRING	SCALE 1:1

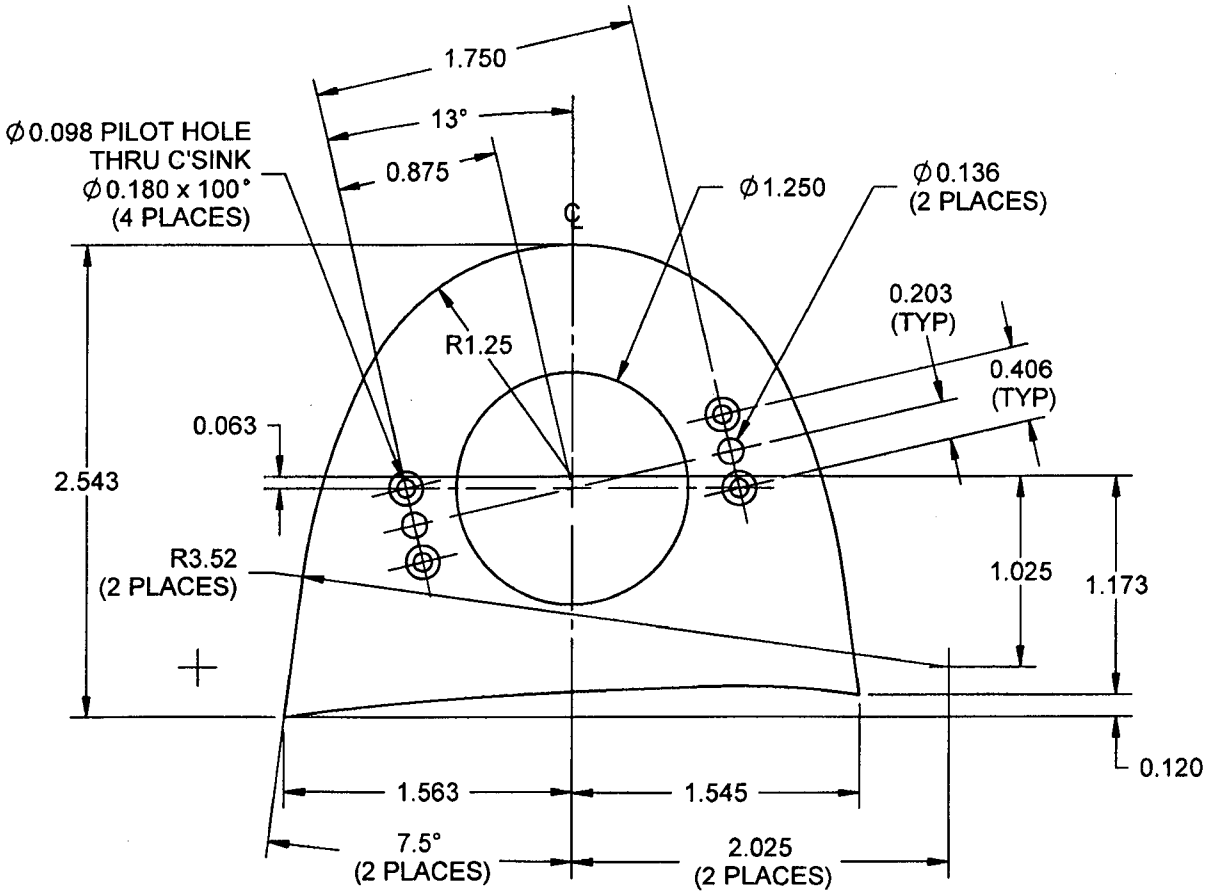

RELEASED
06.08.17

D3484-3 L/H FACE (-4 R/H, OPPOSITE)

NOTES:

1) MATERIAL: 6061-T6 (OR 6061-T62) ALUMINUM SHEET (0.050 THICK) PER AMS-QQ-A-250/11 OR AMS 4025 OR AMS 4027 (REF. DART SPEC. M6061T6S.050)
2) FINISH: NONE
3) TOLERANCES ARE PER DART QSI 018 UNLESS OTHERWISE NOTED
4) ALL DIMENSIONS ARE IN INCHES
5) BREAK ALL SHARP EDGES 0.005 TO 0.010

SHOP COPY
RETURN TO
ENGINEERING
UNCONTROLLED COPY
SUBJECT TO AMENDMENT
WITHOUT NOTICE
WORK ORDER
NO. 30770

COPYRIGHT © 2005 BY DART AEROSPACE LTD.

THIS DOCUMENT IS PRIVATE AND CONFIDENTIAL AND IS SUPPLIED ON THE EXPRESS CONDITION THAT IT IS NOT TO BE USED FOR ANY PURPOSE OR COPIED OR COMMUNICATED TO ANY OTHER PERSON WITHOUT WRITTEN PERMISSION FROM DART AEROSPACE LTD.

DESIGN	DRAWN BY	DART AEROSPACE LTD HAWKESBURY, ONTARIO, CANADA	
CHECKED	APPROVED	DRAWING NO. D3484	REV. D SHEET 4 OF 4
DATE 06.06.22		TITLE TAIL LIGHT FAIRING	SCALE 1:4

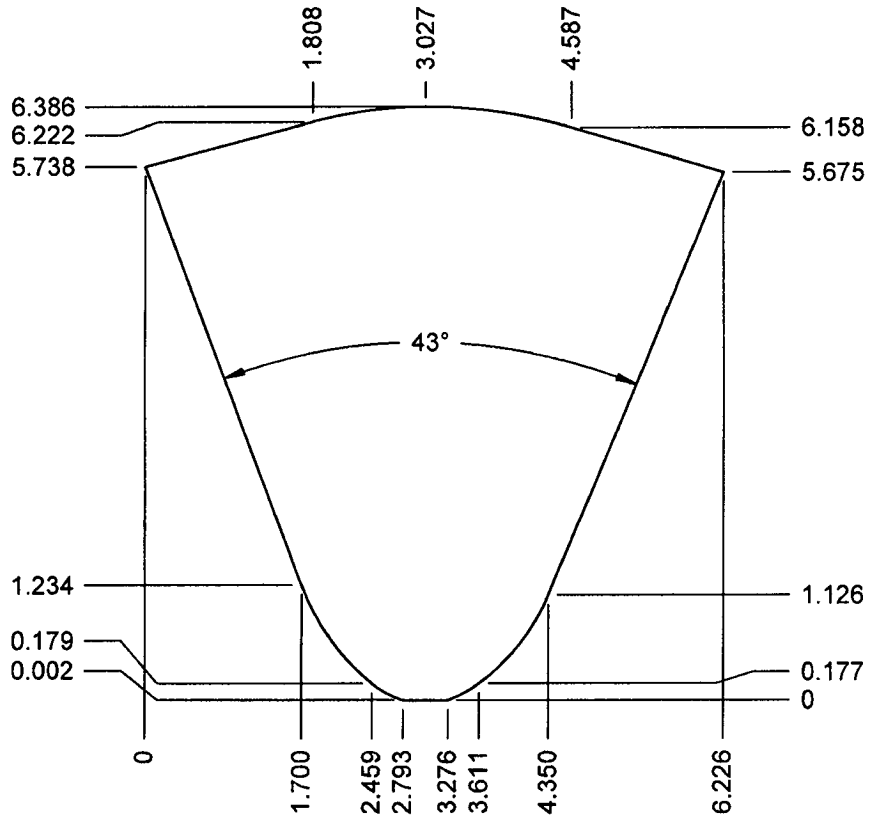

D3484-5F CONE FLAT PATTERN

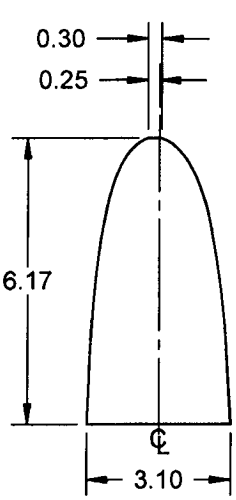

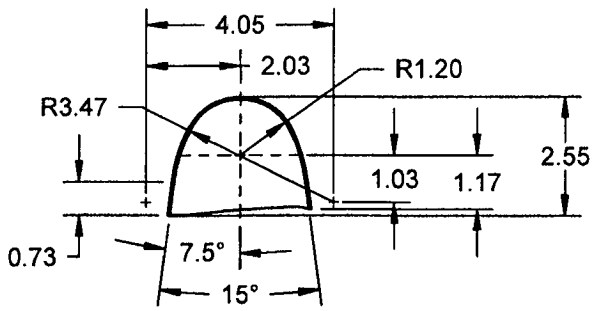

RELEASED
06.08.17

D3484-5 L/H CONE BENDING DETAIL (-6 R/H, OPPOSITE)
(MAKE FROM D3484-5F)

NOTES:

1) MATERIAL: 6061-T6 (OR 6061-T62) ALUMINUM SHEET (0.050 THICK) PER AMS-QQ-A-250/11 OR AMS 4025 OR AMS 4027 (REF. DART SPEC. M6061T6S.050)
2) FINISH: NONE
3) TOLERANCES ARE PER DART QSI 018 UNLESS OTHERWISE NOTED
4) ALL DIMENSIONS ARE IN INCHES
5) BREAK ALL SHARP EDGES 0.005 TO 0.010

SHOP COPY
RETURN TO
ENGINEERING
UNCONTROLLED COPY
SUBJECT TO AMENDMENT
WITHOUT NOTICE
WORK ORDER
NO. 30770

COPYRIGHT © 2005 BY DART AEROSPACE LTD.
THIS DOCUMENT IS PRIVATE AND CONFIDENTIAL AND IS SUPPLIED ON THE EXPRESS CONDITION THAT IT IS NOT TO BE USED FOR ANY PURPOSE OR COPIED OR COMMUNICATED TO ANY OTHER PERSON WITHOUT WRITTEN PERMISSION FROM DART AEROSPACE LTD.

DART AEROSPACE LTD	Work Order:	3077 D
Description: BASE LH	Part Number:	D34841
Inspection Dwg: Rev: D		Page 1 of 1

FIRST ARTICLE INSPECTION CHECKLIST

[X] First Article [X] Prototype

Drawing Dimension	Tolerance	Actual Dimension	Accept	Reject	Method of Inspection	Comments
5.093	+/- 0.010	5.097	✓		Verm	
5.654	+/- 0.010	5.654	✓		Verm	
2.580	+/- 0.010	2.578	✓		Verm	
5.254	+/- 0.010	5.256	✓		Verm	
1.274	+/- 0.010	1.268	✓		Verm	
0.050	+/- 0.010	0.050	✓		Verm	
9.428	+/- 0.010	9.421	✓		Verm vertical	
9.249	+/- 0.010	9.255	✓		Verm vertical	
1.274	+/- 0.010	1.269	✓		Verm vertical	
3.846	+/- 0.010	3.838	✓		vertical Verm	

Measured by:	SAM	Audited by:	BG	Prototype Approval:	
Date:	07/02/24	Date:	07.02.24	Date:	

Rev	Date	Change	Revised by	Approved
A		New Issue	KJ/JLM	